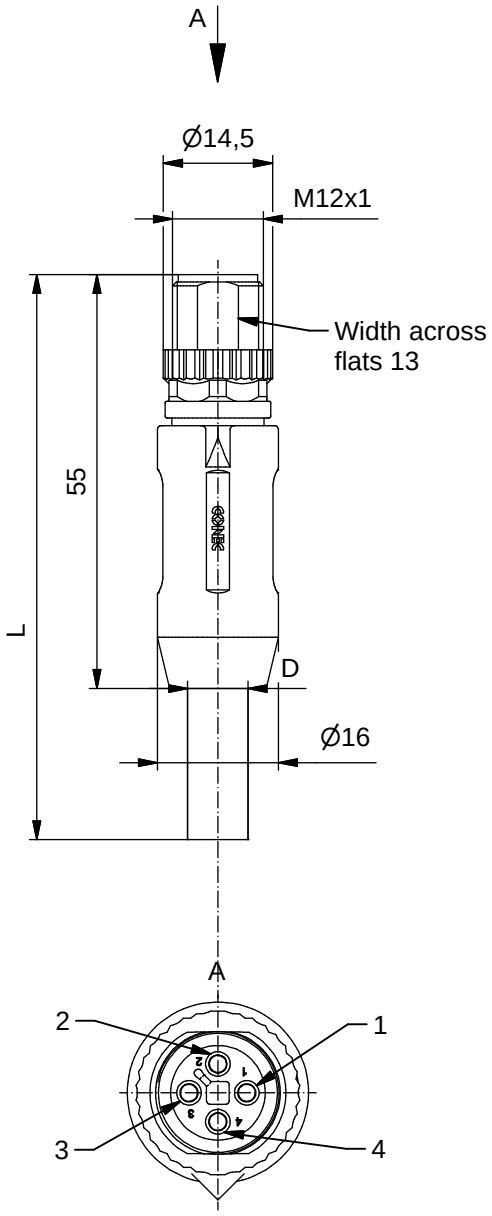

Technical specification:

Rated voltage: IEC 61076-2-111	63 V AC/DC
Current rating: IEC 61076-2-111	12 A at 40°C
Insulation resistance: IEC 60512	>=100 MΩ
Pollution degree: IEC 60664-1	3/2
Degree of protection: IEC 60529	IP 67, in mated condition
Temperatur range:	-30°C ... +80°C
Mating cycles: IEC 60512-9a	>=100

Materials:

Contact:	CuZn
Contact plating:	Nickel, gold plated
Contact carrier:	PA6
Coupling screw:	GD-Zn, nickel plated
Moulding body:	TPU, UL 94, grey
Sleeve:	CuZn, nickel plated

Installation specification:

Recommended torque:	0,6 Nm
Conec installation tool:	Torque wrench: 36-000200 Insert across flats 13: 36-000220

Contact assignment:

1 brown
2 white
3 blue
4 black

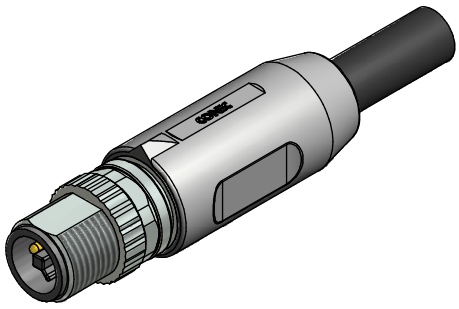

Part no:	Description:	Length L:	Cable:
43-17140	SAL - 12T - RS4 - 2 / A2	2m	PVC, black, 4x1,5mm² Cable: 781-A28400
43-17141	SAL - 12T - RS4 - 3 / A2	3m	
43-17142	SAL - 12T - RS4 - 5 / A2	5m	
43-17143	SAL - 12T - RS4 - 10 / A2	10m	
43-xxxxx	SAL - 12T - RS4 - ... / A2	x	

D see data sheet cable

DO NOT ALTER CAD DRAWING BY HAND
Directive 2011/65/EU RoHS compliant

tolerance of cable: L <= 4m: L + 40mm; L > 4m: L + 1%

general tolerance: 0 ± 0,50mm; 0,0 ± 0,25mm; 0,00 ± 0,10mm

THIS DRAWING MAY NOT BE COPIED OR REPRODUCED IN ANY WAY, AND MAY NOT BE PASSED ON TO A THIRD PARTY WITHOUT WRITTEN PERMISSION. OWNERSHIP AND COPYRIGHT OF CONEC GmbH

dim. in mm

	date	name
drawn	13.02.14	Gitinow
appd.	04.04.14	Franz

title: Male connector M12x1 axial

dwg no: 43K1A2243

part no: see table