AT ALL TIMES WATER RESISTANT CONNECTORS NOT IN USE SHOULD BE COVERED WITH A CONEC WATER RESISTANT CAP OR WATER TIGHT HOOD.

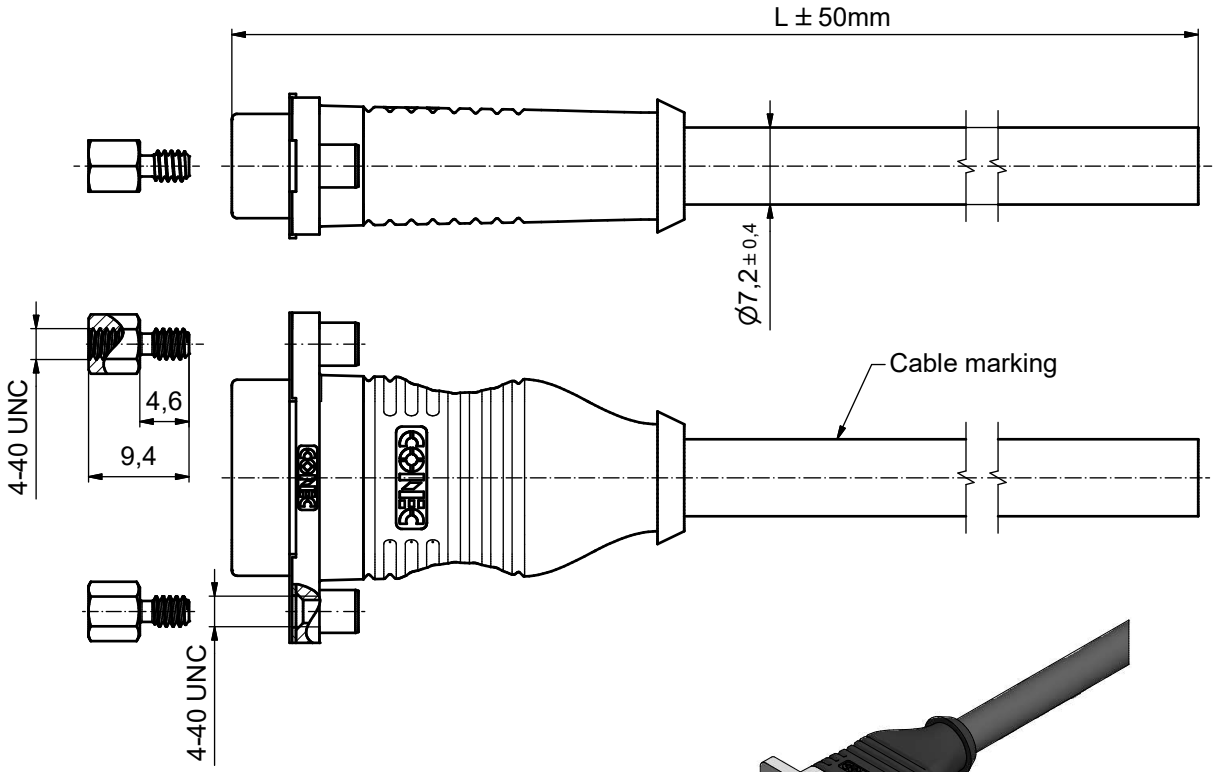

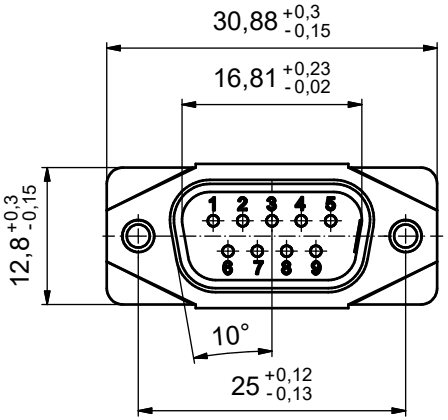

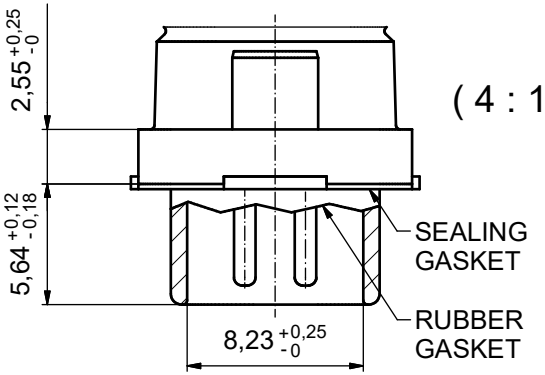

(4 : 1)

NOTES:
1. IP RATING: IP 67
2. METALSHELL: ZINC DIE CAST; min. 50µin NICKEL PLATING over COPPER
3. INSULATORS: PBT GF UL 94 V-0; BLACK
4. SEALING COMPOUND: EPOXY RESIN UL 94 V-0; BLACK
5. CONTACTS: COPPER ALLOY; GOLD FLASH over NICKEL
6. SEALING GASKET: SILICONE; BLUE
7. RUBBER GASKET: TPE; BLACK
8. HEXLOCKING SCREWS: STAINLESS STEEL
9. OVERMOLDING: TECHNOMELT; BLACK
10. RECOMMENDED TORQUE FOR MOUNTING SCREW 35Ncm (3.1 in.LB) / max.67Ncm (6 in.LB)
11. (b) CABLE MARKING: PART NO. CONEC DATE-CODE FA00XXXXXX

RECOMMENDED PANEL CUT-OUT

(3 : 1)

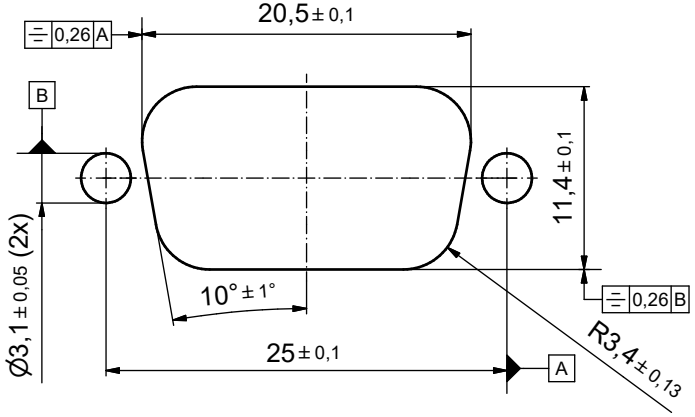

pin assignment:

1) white
2) brown
3) green
4) yellow
5) red
6) blue
7) grey
8) pink
9) -

RoHS compliant

part-no.:	length L:	cable:
15-006643	2m	LiYCY (TP) 4x2x0,25mm² UL2464 cable: 781-GAQ280T
15-006653	4m	
15-006663	5m	

rev.	description	date	name
b	Ä20-0437	08.02.2023	ABU
a	Original		

THIS DRAWING MAY NOT BE COPIED OR REPRODUCED IN ANY WAY, AND MAY NOT BE PASSED ON TO A THIRD PARTY WITHOUT WRITTEN PERMISSION. OWNERSHIP AND COPYRIGHT OF CONEC GmbH

DO NOT ALTER CAD DRAWING BY HAND

tolerance — dim. in mm

	date	name
drawn	17.02.2016	Heinrich
appd.	26.02.2016	Fischer
norm		
d-old		

scale: 2:1 (3:1) (4:1)
material: SEE NOTES

title: D-SUB MALE
9pos. MOLDED
with closed 4-40 UNC thread

dwg no: 15K1A1705
DIN-A3
sh: 1

part no: SEE TABLE